Mounting
for 32 × 16 × 12 mm (1K)

Z1KC003
Part Number

Technical Data

Mechanical Data	
Diameter	3,1 mm
Thread	M3
Length	14 mm
Installation Type	Aluminum profile with T-slot
Mounting Type	Adapter plate
Mounting Type	Slot nut
Material Mounting Plate	Aluminum; 3.3315
Screw material	Stainless Steel
Slot nut material	Stainless Steel
Surface treatment	Clear anodized
For edge length	10 × 10 mm
Sensor tightening torque	0,3 Nm
Scope of delivery	1 × adapter plate, 1 × M3×4 screw, 1 × slot nut, 2 × M3×14 screws
Packaging unit	1 Piece

- **Flexible alignment options**
- **Included: 1 × adapter plate, 1 × M3×4 screw, 1 × slot nut, 2 × M3×14 screws**
- **Suitable for installing the 1K format on ZBPW mounting profiles**

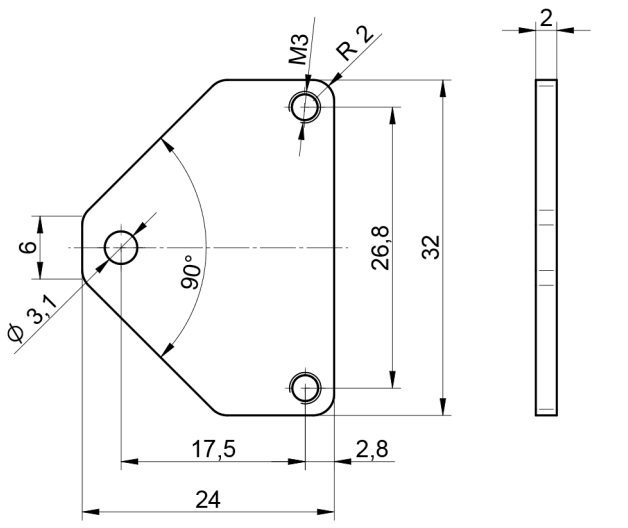

All dimensions in mm (1 mm = 0.03937 Inch)

The mounting system offers flexible alignment options thanks to an adapter plate. The miniature design is fastened to the adapter plate with oval head screws. The adapter plate is fastened to the mounting profile with a slot nut and oval head screw.

RoHS

Specifications are subject to change without notice V0-02.06.2023